LA / LG Motors

BA 2320

Operating Instructions · 12/2012

MOTOX

Answers for industry.

SIEMENS

SIEMENS

MOTOX

LA / LG Motors
BA 2320

Operating Instructions

General information and safety notes 1

Technical description 2

Incoming goods, transport, and storage 3

Mounting 4

Commissioning 5

Operation 6

Faults, causes and remedies 7

Service and maintenance 8

Disposal 9

Technical data 10

Spare parts 11

EC Declaration of Conformity 12

Motors for mounting onto MOTOX gearboxes

12/2012

70000004023775

Legal information

Warning notice system

This manual contains notices you have to observe in order to ensure your personal safety, as well as to prevent damage to property. The notices referring to your personal safety are highlighted in the manual by a safety alert symbol, notices referring only to property damage have no safety alert symbol. These notices shown below are graded according to the degree of danger.

⚠ DANGER
indicates that death or severe personal injury **will** result if proper precautions are not taken.

⚠ WARNING
indicates that death or severe personal injury **may** result if proper precautions are not taken.

⚠ CAUTION
indicates that minor personal injury can result if proper precautions are not taken.

NOTICE
indicates that property damage can result if proper precautions are not taken.

If more than one degree of danger is present, the warning notice representing the highest degree of danger will be used. A notice warning of injury to persons with a safety alert symbol may also include a warning relating to property damage.

Qualified Personnel

The product/system described in this documentation may be operated only by **personnel qualified** for the specific task in accordance with the relevant documentation, in particular its warning notices and safety instructions. Qualified personnel are those who, based on their training and experience, are capable of identifying risks and avoiding potential hazards when working with these products/systems.

Proper use of Siemens products

Note the following:

⚠ WARNING
Siemens products may only be used for the applications described in the catalog and in the relevant technical documentation. If products and components from other manufacturers are used, these must be recommended or approved by Siemens. Proper transport, storage, installation, assembly, commissioning, operation and maintenance are required to ensure that the products operate safely and without any problems. The permissible ambient conditions must be complied with. The information in the relevant documentation must be observed.

Trademarks

All names identified by ® are registered trademarks of Siemens AG. The remaining trademarks in this publication may be trademarks whose use by third parties for their own purposes could violate the rights of the owner.

Disclaimer of Liability

We have reviewed the contents of this publication to ensure consistency with the hardware and software described. Since variance cannot be precluded entirely, we cannot guarantee full consistency. However, the information in this publication is reviewed regularly and any necessary corrections are included in subsequent editions.

Siemens AG
Industry Sector
Postfach 48 48
90026 NÜRNBERG
GERMANY

70000004023775
Ⓟ 05/2013 Technical data subject to change

Copyright © Siemens AG 2012.
All rights reserved

Table of contents

1 General information and safety notes 5
1.1 General information 5
1.2 Copyright 7
1.3 Intended use 7
1.4 Obligations of the user 8
1.5 Particular types of hazards 10
2 Technical description 11
2.1 General description 11
2.2 Cooling 12
2.3 Terminal box 12
2.4 Rating plate 12
2.5 Surface treatment 13
2.5.1 General information on surface treatment 13
2.5.2 Painted version 13
2.5.3 Primed version 15
3 Incoming goods, transport, and storage 17
3.1 Incoming goods 17
3.2 Transport 18
3.2.1 General information on transport 18
3.2.2 Fastening for suspended transport 19
3.3 Storage 21
4 Mounting 23
4.1 Unpacking 23
4.2 General information on installation 23
4.3 Tightening torque for fastening bolts on the motor 25
4.4 Installation conditions for the motor 26
4.5 Condensation drain holes (optional) 26
4.6 Mounting the input or output element on the motor shaft 27
4.7 Connecting the motor 28
4.7.1 General information on motor connection 28
4.7.2 Terminal box 29
4.7.3 Terminal designations 30
4.7.4 Direction of rotation 30
4.7.5 Connecting the cables in the terminal box 31
4.7.6 External grounding 32

4.7.7 Assembly and laying of cables ... 32
4.7.8 Tightening torque for bolts in electrical connections ... 33
4.7.9 Forced ventilation (optional) ... 35
4.7.9.1 General information for commissioning of forced ventilation ... 35
4.7.9.2 Circuit diagrams for forced ventilation ... 36
4.7.9.3 Technical data for forced ventilation ... 37
4.7.10 Operation on the converter ... 39

5 Commissioning ... 41

5.1 Checking the insulation resistance ... 41

5.2 Commissioning the motor ... 43

6 Operation ... 45

7 Faults, causes and remedies ... 47

8 Service and maintenance ... 49

8.1 General notes about maintenance ... 49

8.2 Description of maintenance and repair work ... 50
8.2.1 Locking the manual release of the brake (optional) ... 50
8.2.2 Lubrication ... 51
8.2.3 Cleaning the motor ... 52
8.2.4 Checking tightness of fastening bolts ... 53
8.2.5 Inspection of the motor ... 53
8.2.6 Servicing the brake ... 54
8.2.6.1 Wear of the spring-operated brake ... 54
8.2.6.2 Maintenance intervals for the brake ... 55
8.2.6.3 Adjusting the air gap ... 56
8.2.6.4 Replacing the friction lining ... 58

9 Disposal ... 61

10 Technical data ... 63

10.1 Type designation ... 63

10.2 General technical data ... 64

10.3 Weight ... 66

11 Spare parts ... 67

11.1 Stocking of spare parts ... 67

11.2 Spare parts lists ... 68
11.2.1 MODULOG motor sizes 71 - 200 ... 68
11.2.2 MODULOG brake motor sizes LA71 - LA160 ... 71
11.2.3 MODULOG brake motor sizes LA71 - LA160 with backstop ... 75
11.2.4 Encoder ... 79
11.2.4.1 Encoder on fan cover ... 79
11.2.4.2 Encoder in motor with forced ventilation ... 80

12 EC Declaration of Conformity ... 81

General information and safety notes 1

1.1 General information

Note

Siemens AG does not accept any liability for damage and failures that result from the non-observance of these operating instructions.

These operating instructions are part of the motor delivery. Store the operating instructions near the gearbox.

These operating instructions apply to the standard version of the motors for mounting on the MOTOX gearbox series:

- MODULOG motors sizes 71 to 200
- Motor sizes 225 to 315

Table 1- 1 Order number code

Motor	Structure of the order number position					
	1	2	3	4	11	12
Motor LA / LG or LAI / LGI	2	K	J	1	1	3

Note

In addition to these operating instructions, special contractual agreements and technical documentation apply to these special motor designs and the associated supplementary equipment.

Please refer to the other operating instructions supplied with the product.

The motors described here correspond to the state of the art at the time these operating instructions were printed.

Siemens AG reserves the right to change individual components and accessory parts in the interest of further development. The changes serve to improve the performance and safety. The significant features are retained.

If you have any technical questions, please contact Technical Support.

Europe - Germany
Phone: +49 (0) 911 895 7222
Fax: +49 (0) 911 895 7223

America - USA
Phone: +1 42 32 62 25 22

Asia - China
Phone: +86 10 64 75 75 75

E-Mail: support.automation@siemens.com

Internet German: http://www.siemens.de/automation/support-request

Internet English: http://www.siemens.com/automation/support-request

Applicable operating instructions

Table 1- 2 MOTOX gearbox operating instructions

Title	Product
BA 2010	MOTOX Gearbox
BA 2011	MOTOX Worm Gearbox SC
BA 2012	MOTOX Worm Gearbox S
BA 2019	MOTOX Input Units
BA 2510	MOTOX Optional Add-on Units
BA 2515	MOTOX Gearbox for Monorail Conveyors

Table 1- 3 Motor operating instructions

Title	Product
BA 2310	Three-phase and Single-phase Alternating Current Motors and Brake Motors with Accessories
BA 2320	LA / LG and LAI / LGI Motors

1.2 Copyright

The copyright to these operating instructions is held by Siemens AG.

These operating instructions must not be wholly or partly reproduced for competitive purposes, used in any unauthorized way or made available to third parties without agreement of Siemens AG.

1.3 Intended use

The motors described in these operating instructions have been designed for stationary use in general engineering applications.

They comply with the harmonized standards of the series EN 60034 (VDE 0530). They are not approved for operation in hazardous zones and areas.

Unless otherwise agreed, the motors have been designed for use in plants and equipment in industrial environments.

The motors have been built using state-of-the-art technology and are shipped in an operationally reliable condition. Changes made by users could affect this operational reliability and are forbidden.

Note

The performance data assumes an ambient temperature of -15 °C to +40 °C and an installation altitude of up to 1 000 m above sea level.

In the case of other ambient temperatures and installation altitudes, please contact Technical Support.

The motors are designed only for the area of application described in Section Technical data (Page 63).
Do not operate the gearboxes outside the specified performance limits.
Any different operating conditions require new contractual agreements.

Equipment with degree of protection ≤ IP54 must never be used outdoors. Air-cooled versions are designed for ambient temperatures of -15 °C to +40 °C and for an installation altitude of up to 1 000 m above sea level. Please note any deviations to the data on the rating plate. Conditions at the location of use must comply with all specifications on the rating plate.

Do not climb on the motor. Do not place any objects on the motor.

1.4 Obligations of the user

The operator must ensure that all persons assigned to work on the gearbox have read and understood these operating instructions and that they follow them in all points in order to:

- Eliminate the risk to life and limb of users and other persons.
- Ensure the operational safety of the gearbox.
- Avoid disruptions and environmental damage through incorrect use.

Note the following safety information:

Shut down the geared motors and disconnect the power before you carry out any work on them.

Make sure that the drive unit cannot be turned on accidentally, e.g. lock the key-operated switch. Place a warning notice at the drive connection point which clearly indicates that work is in progress on the geared motor.

Carry out all work with great care and with due regard to "safety".

For all work, observe the relevant regulations for work safety and environment protection.

Read the instructions on the rating plates attached to the geared motor. The rating plates must be kept free from paint and dirt at all times. Replace any missing rating plates.

In the event of changes during operation, switch off the drive unit immediately.

Take appropriate protective measures to prevent accidental contact with rotating drive parts, such as couplings, gear wheels or belt drives.

Take appropriate measures to prevent accidental contact with parts and equipment that heat up to over +70 °C during operation.

When removing protective equipment, keep fasteners in a safe place. Re-attach removed protective equipment before commissioning.

Collect and dispose of used oil in accordance with regulations. Remove oil spillages immediately with an oil-binding agent in compliance with environmental requirements.

Do not carry out any welding work on the gearbox. Do not use the gearbox as a grounding point for welding operations.

Carry out equipotential bonding in accordance with applicable regulations and directives by electrotechnology specialists.

Do not use high-pressure cleaning equipment or sharp-edged tools to clean the gearbox.

Observe the permissible tightening torque of the fastening bolts.

Replace damaged bolts with new bolts of the same type and strength class.

Siemens AG accepts the warranty only for original spare parts.

The manufacturer who installs the geared motors in a plant must include the regulations contained in the operating instructions in its own operating instructions.

1.5 Particular types of hazards

⚠ WARNING
Extreme surface temperatures Hot surfaces over +55 °C pose a burn risk. Cold surfaces below 0 °C pose a risk of damage due to freezing. Do not touch the gearbox without protection.

⚠ WARNING
Hot, escaping oil Before starting any work wait until the oil has cooled down to below +30 °C.

⚠ WARNING
Poisonous vapors when working with solvents Avoid breathing in vapors when working with solvents. Ensure adequate ventilation.

⚠ WARNING
Risk of explosion when working with solvents Ensure adequate ventilation. Do not smoke!

⚠ WARNING
Risk of eye injury Rotating parts can throw off small foreign particles such as sand or dust. Wear protective eyewear!

In addition to the prescribed personal protection gear, also wear suitable protective gloves and safety glasses.

Technical description 2

2.1 General description

The motor complies with the following regulations:

Table 2- 1 Overview of standards for the motor

Designation	Standard
Ratings and operating performance	EN 60034-1
Degree of protection	EN 60034-5
Cooling	EN 60034-6
Type of construction according to modular system	EN 60034-7
Terminal marking and direction of rotation	EN 60034-8
Noise emission	EN 60034-9
Thermal protection	EN 60034-11
Starting characteristics for rotating electrical motors	EN 60034-12
Vibration severity levels	EN 60034-14
IEC standard voltages	IEC 60038
Safety of machinery	EN 60204-1

The motor is equipped with grease-lubricated roller bearings. The bearings are permanently lubricated.

The stator winding is designed for temperature class 155(F).

In the standard version, the rotor corresponds to vibration severity level A.

The technical data for the optional monitoring equipment can be viewed in the circuit diagrams, on the rating plate or in the special order documents.

Housing

The stator housing and the rating plate are made from aluminum casting up to size 160, and from cast iron from size 180.

The surface of the stator housing has cooling fins and a mounted terminal box.

The fan cover is made of sheet steel.

2.2 Cooling

NOTICE
High housing temperature Dust deposits prevent heat radiation and cause high housing temperatures. Keep the motor free from dirt and dust, etc.

The motors are designed for fin cooling; an external fan draws the cooling air in through the opening in the fan cover and blows it across the surface of the stator frame.

2.3 Terminal box

In the motor terminal box, alongside the motor connection terminals (terminal board), additional connecting clamps are available for monitoring equipment. The number of available terminals is shown in the circuit diagrams. The circuit diagrams are located in the terminal box.

2.4 Rating plate

The rating plate on the gearbox or geared motor is of coated aluminum foil. It is covered with a special masking film which ensures permanent resistance to UV radiation and media of all kinds, such as oils, greases, salt water and cleaning agents.

The adhesive and the material ensure firm adhesion and long-term legibility within the operating temperature range from -40 °C to +155 °C.

The edges of the rating plate are paint-finished to match the color of the gearbox or motor to which it is affixed.

In special cases, riveted or bolted metal plates are used.

2.5 Surface treatment

2.5.1 General information on surface treatment

All paint finishes are sprayed on.

NOTICE
Failure of the exterior protection Any damage to the paint finish will destroy the exterior protection and cause corrosion. Do not damage the paint.

Note

Information about the ability to be repainted does not guarantee the quality of the paint product purchased from your supplier.

Only the paint manufacturer is liable for quality and compatibility.

2.5.2 Painted version

The corrosion protection system is classified according to the corrosiveness categories in DIN EN ISO 12944-2.

Table 2- 2 Paint according to corrosiveness categories

Paint system	Description
Corrosiveness category C1 paint for normal environmental stress	
Dip primer 1-component hydro paint	• Indoor installation • Heated buildings with neutral atmospheres • Resistance to greases and some resistance to mineral oils, aliphatic solvents • Standard paint

Paint system	Description
Corrosiveness category C2 paint for low environmental stress	
Dip primer 2-component polyurethane top coat	• Indoor and outdoor installation • Unheated buildings with condensation, production areas with low humidity, e.g. warehouses and sports facilities • Atmospheres with little contamination, mostly rural areas • Resistance to greases, mineral oils and sulfuric acid (10 %), caustic soda (10 %) and some resistance to aliphatic solvents
Corrosiveness category C3 paint for medium environmental stress	
Dip primer 2-component polyurethane base coat 2-component polyurethane top coat	• Indoor and outdoor installation • Production areas with high humidity and some air contamination, e.g. food production areas, dairies, breweries and laundries • Urban and industrial atmospheres, moderate contamination from sulfur dioxide, coastal areas with low salt levels • Resistance to greases, mineral oils, aliphatic solvents, sulfuric acid (10 %), caustic soda (10 %)
Corrosiveness category C4 paint for high environmental stress	
Dip primer 2-component epoxy zinc phosphate 2-component polyurethane top coat	• Indoor and outdoor installation • Chemical plants, swimming pools, wastewater treatment plants, electroplating shops, and boathouses above seawater • Industrial areas and coastal areas with moderate salt levels • Resistance to greases, mineral oils, aliphatic solvents, sulfuric acid (10 %), caustic soda (10 %)

Paint system	Description
Corrosiveness category C5 paint for very high environmental stress	
Dip primer 2-component epoxy zinc phosphate 2-component epoxy iron mica 2-component polyurethane top coat	• Indoor and outdoor installation • Buildings and areas with almost constant condensation and high contamination, e.g. malt factories and aseptic areas • Industrial areas with high humidity and aggressive atmosphere, coastal areas and offshore environments with high salt levels • Resistance to greases, mineral oils, aliphatic solvents, sulfuric acid (10 %), caustic soda (10 %)

In case of corrosiveness category C1, can be overpainted with 1-component hydrosystem after prior rubbing down.

In case of corrosiveness categories C2 to C5, can be overpainted with 2-component polyurethane paint, 2-component epoxide paint and 2-component acrylic paint after prior rubbing down.

2.5.3 Primed version

Table 2- 3 Primer according to corrosiveness categories

Paint system	Can be overpainted with
Unpainted (corrosiveness category C1 G)	
Cast iron parts immersion primed, steel parts primed or zinc-plated, aluminum and plastic parts untreated	• Synthetic paint, synthetic resin paint, oil paint • 2-component polyurethane paint • 2-component epoxy paint
Primer according to corrosiveness category C2 G	
2-component metal primer, desired coat thickness 60 µm	• 2-component polyurethane paint • 2-component epoxy paint, acid-hardening paint • 2-component acrylic paint
Primer according to corrosiveness category C4 G	
2-component epoxide zinc phosphate, desired coat thickness 120 µm	• 2-component polyurethane paint • 2-component epoxy paint, acid-hardening paint • 2-component acrylic paint

On gearbox or geared motor versions which are primed or unpainted the rating plate and the masking film are covered with a paint-protective film. These facilitate repainting without further preparation, e.g. masking with adhesive tape.

Peeling off the paint-protective film

The paint coat must have fully hardened before the paint-protective film is peeled off (be at least "touch-proof").

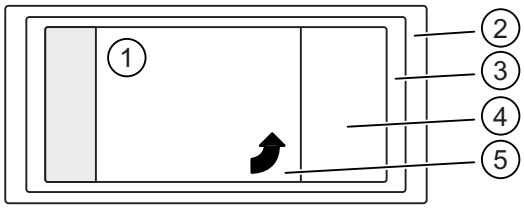

① Company logo
② Masking film
③ Rating plate
④ Paint-protective film
⑤ Peeling tab

Figure 2-1 Rating plate with paint-protective film

Procedure

1. Pull the peeling tab ⑤ up.
2. Carefully peel the paint-protective film ④ off diagonally from one corner (not parallel to the plate).
3. Blow any paint fragments away or wipe them off with a clean cloth.

You have now removed the paint-protective film.

Incoming goods, transport, and storage 3

3.1 Incoming goods

NOTICE
Transport damage impairs the correct function of the gearbox Never commission a faulty gearbox or geared motor.

Note

Do not open or damage parts of the packaging that preserve the product.

Note

Check that the technical specifications are in accordance with the purchase order.

Inspect the delivery immediately on arrival for completeness and any transport damage.

Notify the freight company of any damage caused during transport immediately (this is the only way to have damage rectified free of charge). Siemens AG will not accept any claims relating to items missing from the delivery and which are submitted at a later date.

The gearbox or geared motor is delivered in a fully assembled condition. Additional items are sometimes delivered packaged separately.

The products supplied are listed in the dispatch papers.

3.2 Transport

3.2.1 General information on transport

NOTICE
The use of force will damage the gearbox or geared motor Transport the gearbox or geared motor carefully. Avoid knocks. Before putting the drive into operation, remove any transport fixtures and keep them safe or render them ineffective. You can then use them again for transporting further items or you can apply them again.

Different forms of packaging may be used, depending on the size of the gearbox or geared motor and the method of transport. Unless contractually agreed otherwise, the seaworthy packaging complies with HPE Packaging Guidelines (Bundesverband Holzpackmittel Paletten Exportverpackungen e.V., the German Federal Association for wooden packaging, pallets, and export packaging).

Note the symbols which appear on the packaging. These have the following meanings:

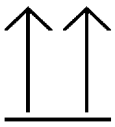
This way up

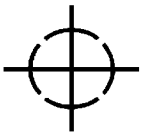
Center of gravity

Fragile

Do not use hand hook

Keep dry

Attach here

Keep cool

3.2.2 Fastening for suspended transport

⚠ WARNING

Inadequately secured gearbox or geared motors

Observe the maximum load for the transport eye ③ of the bevel helical gearbox or the eyebolt axis ④.

Use only the transport eye ③ or eyebolt ④ of the gearbox to transport the gearbox or geared motor.

Do not use the integrally cast lifting eyes ① on the motor for transport because of the risk of breaking. Only use the eyebolt ② on the motor to transport the motor prior to mounting or following removal.

If necessary, use additional, suitable lifting accessories for transport or during installation.

When attaching by a number of chains and ropes just two strands must be sufficient to bear the entire load. Secure lifting accessories against slipping.

NOTICE

Do not rig eyebolts to the front threads at the shaft ends for transportation purposes

Transport eye on the bevel helical gearbox

Eyebolt on the helical gearbox, parallel shaft gearbox, helical worm gearbox

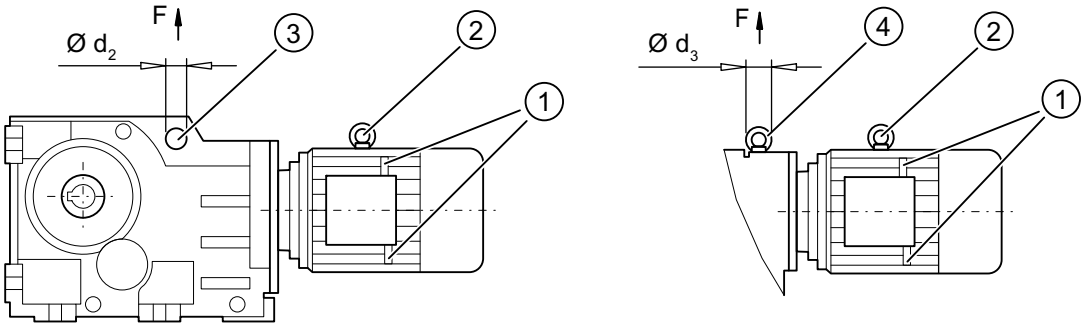

① Integrally cast eye on the motor
② Eyebolt on the motor
③ Transport eye on the bevel helical gearbox
④ Eyebolt on the gearbox

Figure 3-1 Fastening the gearbox or geared motor for suspended transport

The maximum load m in kg generated by the geared motor to be attached, with pull ↑ in direction F is listed in the following tables:

Table 3- 1 Maximum load of the transport eye on the bevel helical gearbox

Size	m [kg]	d_2 [mm]	Size	m [kg]	d_2 [mm]
K.38	200	22	K.128	800	40
K.48	250	22	K.148	1 300	44
K.68	350	26	K.168	1 800	55
K.88	600	30	K.188	2 300	55
K.108	750	35			

Table 3- 2 Maximum load of the eyebolt on the gearbox

Thread size	m [kg]	d_3 [mm]	Thread size	m [kg]	d_3 [mm]
M8	140	36	M20	1 200	72
M10	230	45	M24	1 800	90
M12	340	54	M30	3 600	108
M16	700	63			

Procedure

1. Mount the geared motor on the transport device by the heaviest permissible weight to be attached. This will normally be on the main gearbox.
2. Check that the eyebolt is firmly seated.

The geared motor is slung for transport.

3.3 Storage

General information for storage

⚠ WARNING
Danger of serious injuries caused by falling objects **Danger of damage to the gearbox when stacked** Do not stack motors on top of each other.

NOTICE
Failure of the exterior protection Mechanical damage, chemical damage and thermal damage, such as scratches, acids, alkalis, sparks, welding beads and heat cause corrosion. Do not damage the paint finish.

Unless contractually agreed otherwise, the guarantee period for the standard preservative lasts 6 months from the date of delivery.

In the case of storage in transit over 6 months, special arrangements must be made for preservation. Please contact Technical Support.

Store the gearbox or geared motor in dry, dust-free rooms that are maintained at a constant temperature.

The storage location must be vibration- and shock-free.

The free shaft ends, sealing elements and flange surfaces must have a protective coating.

Storage up to 36 months

Store motors in dry, dust-free rooms that are maintained at a constant temperature. Special packing is then not necessary.

If such premises are not available, pack the gearbox or the geared motor in plastic film or air-tight sealed film and materials. The films and materials must be able to accept moisture. Cover them to provide protection against heat, direct sunlight and rain.

The permissible ambient temperature is -25 °C to +50 °C.

The life of the corrosion protection is 36 months from delivery.

Mounting 4

4.1 Unpacking

NOTICE
Transport damage impairs the correct function of the gearbox Never commission faulty gearboxes or geared motors.

Check the gearbox or geared motor for completeness and for damage. Report any missing parts or damage immediately.

Remove and dispose of the packaging material and transport fixtures appropriately.

4.2 General information on installation

⚠ WARNING
Uncontrolled starting or reversing of the system under load The entire system must be load-free so that there is no danger during this work.

NOTICE
Irreparable damage to toothed components and bearings due to welding Do not carry out any welding work on the geared motor. The geared motor must not be used as a grounding point for welding operations.

NOTICE
Overheating of the geared motor due to exposure to direct sunlight Provide suitable protective equipment such as covers or roofs. Prevent heat accumulation.

NOTICE
Malfunction resulting from foreign objects The operator must ensure that no foreign objects impair the function of the geared motor.

NOTICE
Exceeding the permissible oil sump temperature due to incorrect settings of temperature monitoring equipment An alarm must be output when the maximum permissible oil sump temperature is reached. The geared motor must be switched off when the maximum permissible oil sump temperature is exceeded. This switching off can cause plant shutdown.

Note

Use headless screws of strength class 8.8 or higher to fasten the geared motor.

Exercise particular care during mounting and installation. The manufacturer cannot be held liable for damage caused by incorrect mounting and installation.

Make sure that there is sufficient space around the geared motor for mounting, maintenance and repair.

On geared motors with a fan, leave sufficient free space for the entry of air. Observe the installation conditions for the geared motor.

Provide sufficient lifting gear at the start of mounting and fitting work.

Observe the type of construction specified on the rating plate. This ensures that the correct quantity of lubricant is provided.

Use all the fastening means which have been assigned to the relevant type of construction.

Cap screws cannot be used in some cases due to a lack of space. In such cases, please contact Technical Support quoting the type of gearbox.

4.3 Tightening torque for fastening bolts on the motor

The general tolerance for the tightening torque in Nm is 10 %. The friction coefficient is 0.14 µ.

Table 4- 1 Tightening torques for fastening bolts

Thread size	Tightening torque at strength class		
	8.8	10.9	12.9
	[Nm]	[Nm]	[Nm]
M4	3	4	5
M5	6	9	10
M6	10	15	18
M8	25	35	41
M10	50	70	85
M12	90	120	145
M16	210	295	355
M20	450	580	690
M24	750	1 000	1 200
M30	1 500	2 000	2 400
M36	2 500	3 600	4 200

4.4 Installation conditions for the motor

⚠ CAUTION

Danger of overheating due to insufficient cooling

Protect intake and outlet ports against blockages and coarse dust.

The cooling air must be able to enter the air inlets unimpeded and be discharged once more through the air outlets. Exhaust air should not be drawn back in again.

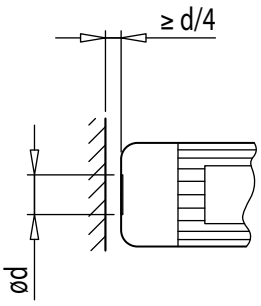

Figure 4-1 Installation condition for the motor

The permissible coolant temperature (ambient temperature at installation location) is -15 °C to +40 °C for an installation altitude of up to 1 000 m above sea level.

For types of construction with a motor shaft end facing upwards, a suitable cover must be fitted to prevent foreign objects from falling into the fan.

4.5 Condensation drain holes (optional)

When installing the surface-cooled motor, take care that the condensation drain holes are at the lowest point.

4.6 Mounting the input or output element on the motor shaft

⚠ WARNING

Danger of burns due to hot parts

Do not touch the geared motor without protection.

NOTICE

Damage to shaft sealing rings caused by solvent or benzine

Avoid contact at all times.

NOTICE

Damage to shaft sealing rings caused by heating over 100 °C

Protect shaft sealing rings from heating up due to radiant heat using thermal shields.

NOTICE

Alignment errors caused by excessive angle or axial displacement of the shaft ends to be joined lead to premature wear or material damage

Ensure precise alignment of the individual components.

NOTICE

Damage to bearings, housing, shaft, and locking rings due to improper handling

Do not use impacts or knocks to force the input and output elements to be mounted onto the shaft.

Note

Deburr the parts of elements to be fitted in the area of the hole or keyways.

Recommendation: 0.2 x 45°

Where couplings are to be fitted in a heated condition, observe the specific operating instructions for the coupling. Unless otherwise specified, the heat can be applied inductively, using a torch or in a furnace.

Use the centering holes in the shaft end faces.

Use a fitting device to fit the input or output elements.

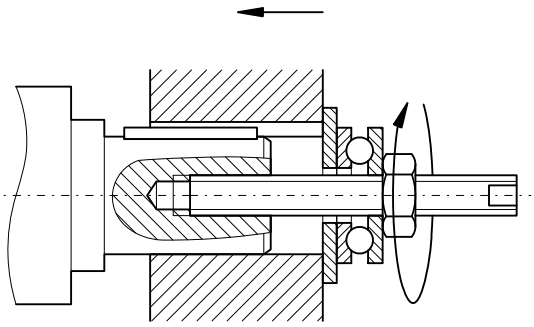

Figure 4-2 Example of a fitting device

The motor's rotor is dynamically balanced. The balance status is specified in the keyway: H = Half-key balancing, F = Full-key balancing.

Adjust the balance of the transmission parts to be fitted to the rotor balancing. For half-key balancing H, remove projecting, visible parts of the feather key.

4.7 Connecting the motor

4.7.1 General information on motor connection

DANGER

Any work may only be carried out when the machine is stationary, isolated from the power supply and secured so that it cannot be switched back on again. This also applies to auxiliary circuits, e.g. anti-condensation heating

Checking safe isolation from power supply.

If the incoming power supply system displays any deviations from the rated values in terms of voltage, frequency, curve form or symmetry, such deviations will magnify the increase in temperature and influence electromagnetic compatibility.

Before starting work, make sure that a protective conductor is securely connected.

Connect the motor in such a way that a permanently safe electrical connection is ensured. Wire ends must not protrude. Use matching cable end pieces.

Connect the supply voltage in the terminal box. Arrange the disconnecting link according to the circuit diagram for star or delta connection in the terminal box.

Select the connection cables according to DIN VDE 0100. Take into account the rated current and the plant-specific conditions.

The following required information for connection is specified in the technical data:

- Direction of rotation
- Number and arrangement of the connections
- Circuit / connection of the machine winding.

4.7.2 Terminal box

NOTICE
Please observe the tightening torques for cable glands and other nuts and bolts When performing a test run, secure the feather keys without output elements.

NOTICE
Do not damage the terminal box or other functional parts inside the terminal box

NOTICE
It must be ensured that there are no foreign bodies, dirt or moisture in the terminal box The terminal box must be sealed so that dust and water cannot enter. Seal the terminal box with the original seal. Seal cable entries to the terminal box and other open cable entries with an O-ring or suitable flat gasket.

Note

For a standard terminal board with 6 terminal studs, the terminal box can be turned 4 x 90 degrees on the terminal base of the machine housing.

The temperature sensor and anti-condensation heating are connected in the terminal box.

4.7.3 Terminal designations

For terminal designations, the following principle definitions apply to three-phase machines:

Table 4- 2 Terminal designations using the example 1U1-1

1	U	1	-	1	Designation
x					Index showing the pole assignment for pole-changing machines (where applicable, a lower number = lower speed) or, in special cases, for a subdivided winding
	x				Phase designation (U, V, W)
		x			Index showing winding start (1) index showing winding end (2) other indexes if there is more than one connection per winding
				x	Additional index for cases in which it is obligatory to connect parallel power feed cables to several terminals with otherwise identical designations

4.7.4 Direction of rotation

The motors are suitable for clockwise and counter-clockwise rotation.

Connection of the power cables in the phase sequence L1, L2, L3 to U, V, W results in clockwise rotation, when looking at the drive-end shaft end of the motor (D- end). If two of the connections are swapped, the resulting direction of rotation is counter-clockwise, e.g. L1, L2, L3 to V, U, W.

In the case of geared motors intended for only one direction of rotation, e.g. with backstop, the prescribed direction of rotation is marked by a direction arrow on the geared motor.

Clockwise

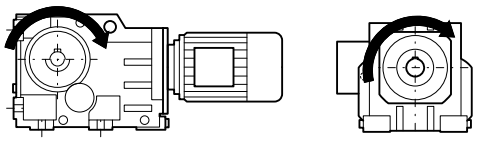

Counter-clockwise

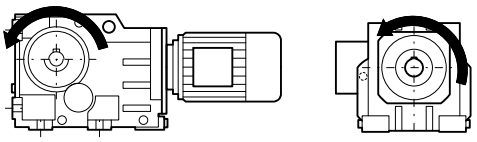

Figure 4-3 Output side A

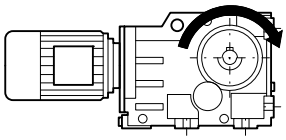

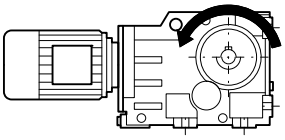

Figure 4-4 Output side B

Table 4- 3 Direction of rotation of the geared motors with a view of the output shaft

Gearbox type	View of	Direction of rotation	
		Output shaft	Drive shaft
Z18 … 188	Output shaft	Right	Right
		Left	Left
D18 … 188	Output shaft	Right	Left
		Left	Right
FZ28, 38B … 188B, 208	A side of the output shaft	Right	Right
		Left	Left
FD28, 38B … 188B, 208	A side of the output shaft	Right	Left
		Left	Right
B28 … 38	A side of the output shaft	Right	Right
		Left	Left
K38 … 88	A side of the output shaft	Right	Left
		Left	Right
K108 … 188	A side of the output shaft	Right	Right
		Left	Left
K38 … 188	B side of the output shaft	Right	Left
		Left	Right
C28 … 88	A side of the output shaft	Right	Right
		Left	Left

4.7.5 Connecting the cables in the terminal box

Note

The direct contact between the cable lug surfaces and the contact nuts ensures that the connection can carry current.

In the case of terminals with terminal clips, the conductors are spread out in such a way that the terminating heights on both sides of the web are about the same. This method of connection requires that a single conductor be bent into a U shape or connected with a cable lug. The same applies to the inner and outer terminals of the ground conductor.

The choice of cable lug size must match the required conductor cross-section and the bolt size. A sloped / angular arrangement is only permitted provided the required air clearances and creepage distances are adhered to.

Remove the insulation from the conductor ends so that the remaining insulation is almost long enough to reach the cable lug.

4.7.6 External grounding

Please note when connecting, that

- The contact surface must be clean and bright, and protected with a suitable anti-corrosion agent, e.g. acid-free Vaseline
- The cable lug must be inserted between the contact bracket and the grounding bracket; it is not permissible to remove the contact bracket pressed into the housing
- The spring washer must be under the head of the screw
- The tightening torque of the terminal screw must be as specified in the table.

Table 4- 4 Maximum conductor connection of the external grounding

Motor size	Thread size
63 - 90	M4
100 - 112	M5
132 - 160	M6

4.7.7 Assembly and laying of cables

Note

The screw-type connections must have been matched to the connecting cables used (armoring, braid, shield).

Screw the screw-type connection into the housing or fasten with a nut.

4.7.8 Tightening torque for bolts in electrical connections

Terminal board connection

Please observe the following tightening torques for bolts on the terminal box and grounding conductors.

Table 4- 5 Tightening torque for terminal board connection

Thread size	Tightening torque		Thread size	Tightening torque	
	min.	max.		min.	max.
	[Nm]	[Nm]		[Nm]	[Nm]
M4	0.8	1.2	M10	9	13
M5	1.8	2.5	M12	14	20
M6	2.7	4	M16	27	40
M8	5.5	8			

Type of conductor connection

Table 4- 6 Conductor cross-section

When connecting using a DIN cable lug: Angle the cable lug downwards as described in DIN 46 234			
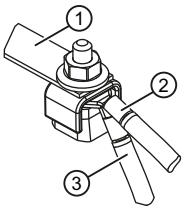			... 25 mm²
Connection of an individual conductor with terminal clamp			
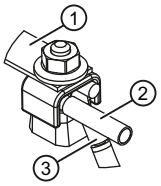	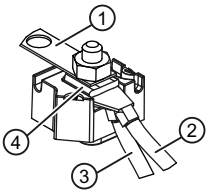	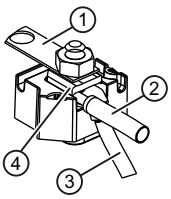	... 10 mm²

Connection of two conductors of approximately the same thickness with terminal clamp	
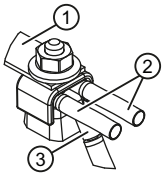	... 25 mm²

① Connecting rail
② Line connecting cable
③ Motor connecting cable
④ Cover washer

Grounding connection type

Table 4- 7 Cable cross-section for the ground connection

Connecting an individual conductor under the external grounding bracket	
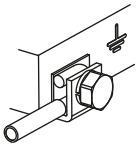	... 10 mm²
In the case of connection with a DIN cable lug, under the external grounding bracket DIN 46234	
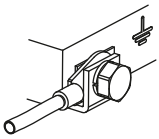	... 25 mm²

Cable gland

NOTICE
Different cable jacket material damaged when the cable jacket is subject to an excessively high tightening torque When different cable jacket materials are used, apply a lower tightening torque.

For metal or plastic cable glands, please use the following tightening torques for direct mounting. The O-ring cross-section is 2 mm.

Table 4- 8 Tightening torque for cable gland

Thread size	Tightening torque ±10 %		Thread size	Tightening torque ±10 %	
	Metal	Plastic		Metal	Plastic
	[Nm]	[Nm]		[Nm]	[Nm]
M12 x 1.5	8	4	M32 x 1.5	18	6
M16 x 1.5	10		M40 x 1.5		
M20 x 1.5	12		M50 x 1.5	20	
M25 x 1.5			M63 x 1.5		

4.7.9 Forced ventilation (optional)

4.7.9.1 General information for commissioning of forced ventilation

Please note the direction of rotation. It is indicated with an arrow on the forced ventilation unit.

Connect the forced ventilation according to the applicable circuit diagram.

Before commissioning the motor, check that the forced ventilation is working properly.

The forced ventilation must be switched on during motor operation.

After the motor has been switched off, the forced ventilation must continue to run, depending on the temperature.

4.7.9.2 Circuit diagrams for forced ventilation

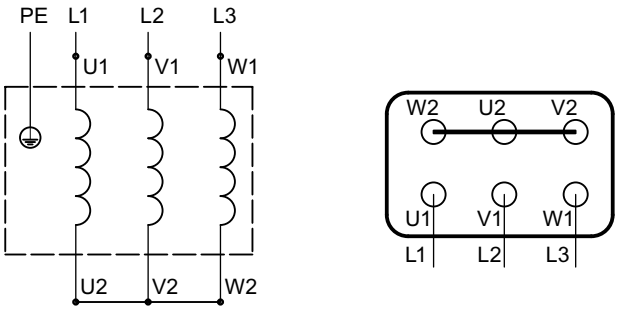

Figure 4-5 3~ Y star connection

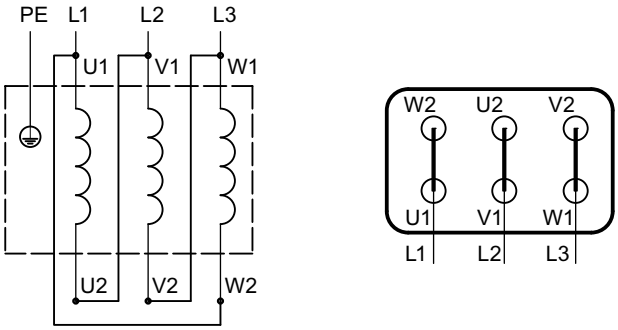

Figure 4-6 3~ Δ delta connection

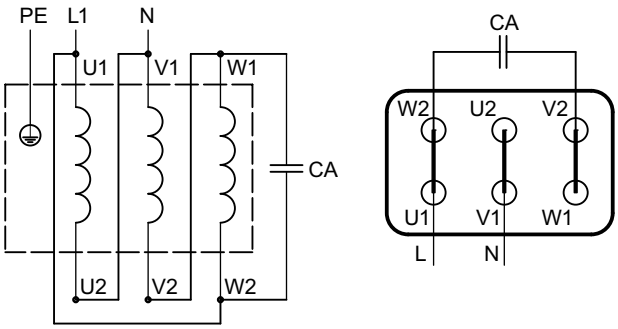

Figure 4-7 1~ ⊥ (Δ) Steinmetz delta connection

U1 (T1)	Black	V1 (T2)	Light blue	W1 (T3)	Brown
U2 (T4)	Green	V2 (T5)	White	W2 (T6)	Yellow

4.7.9.3 Technical data for forced ventilation

Table 4- 9 Technical data for forced ventilation

Size	Frequency	Rated voltage range	Rated current	Input power	Volume flow rate
	[Hz]	Phase	[A]	[W]	[m³/h]
71	50	1AC 3AC	0.12 0.11 / 0.06	84 100	65
	60	1AC 3AC	0.12 0.11 / 0.06	59 103	80
80	50	1AC 3AC	0.14 0.11 / 0.06	84 102	100
	60	1AC 3AC	0.14 0.11 / 0.06	64 104	120
90	50	1AC 3AC	0.29 0.38 / 0.22	82 97	170
	60	1AC 3AC	0.29 0.38 / 0.22	70 101	210
100	50	1AC 3AC	0.30 0.37 / 0.22	86 100	220
	60	1AC 3AC	0.30 0.37 / 0.22	79 105	260
112	50	1AC 3AC	0.37 0.35 / 0.20	85 95	310
	60	1AC 3AC	0.37 0.35 / 0.20	95 102	350
132	50	1AC 3AC	0.57 0.58 / 0.33	115 138	450
	60	1AC 3AC	0.57 0.58 / 0.33	185 148	530
160	50	1AC 3AC	0.91 0.93 / 0.56	225 220	780
	60	1AC 3AC	- 0.93 / 0.56	- 280	880
180	50	1AC 3AC	0.97 0.93 / 0.56	225 220	860
	60	1AC 3AC	- 0.93 / 0.56	- 280	
200	50	1AC 3AC	0.97 0.93 / 0.56	225 220	950
	60	1AC 3AC	- 0.93 / 0.56	- 280	-
225	50	3AC	2.00 / 1.15	450	-
	60	3AC	1.05	520	-

Size	Frequency	Rated voltage range	Rated current	Input power	Volume flow rate
	[Hz]	Phase	[A]	[W]	[m³/h]
250	50	3AC	2.00 / 1.15	450	-
	60	3AC	1.05	520	-
280	50	3AC	2.00 / 1.15	450	-
	60	3AC	1.05	520	-
315	50	3AC	2.00 / 1.15	450	-
	60	3AC	1.05	520	-

Table 4- 10 Rated voltage range of motor

Size	Frequency	Rated voltage range		
	[Hz]	Phase	[V]	Switching
71 … 112	50	1AC	220 … 277	⊥ (Δ)
		3AC	220 … 290 / 380 … 500	Δ / Y
	60	1AC	220 … 277	⊥ (Δ)
		3AC	220 … 332 / 380 … 575	Δ / Y
132 … 200	50	1AC	230 … 277	⊥ (Δ)
		3AC	220 … 290 / 380 … 500	Δ / Y
	60	1AC	230 … 277	⊥ (Δ)
		3AC	220 … 332 / 380 … 575	Δ / Y
225 … 315	50	3AC	220 … 240 / 380 … 420	Δ / Y
	60	3AC	440 … 480	Δ / Y

4.7.10 Operation on the converter

Permissible voltage stress

CAUTION

Converters without an output filter cause damage to the motor insulation due to impermissible voltage peaks

Reduce the maximum motor voltage to noncritical values by using an output filter on the converter.

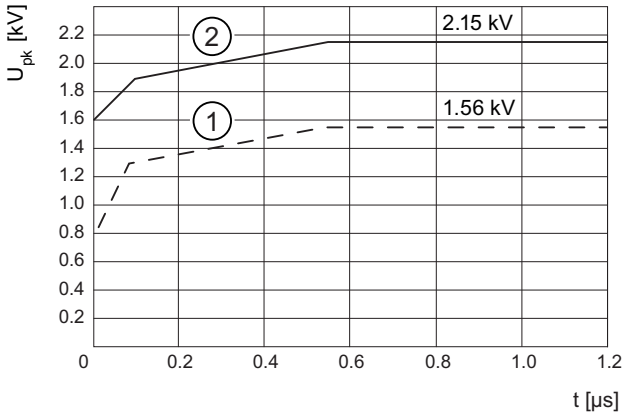

① Standard insulation
② Reinforced insulation
U_{pk} Pulse voltage
t Rise time

Figure 4-8 Limit curves for the pulse voltage

Bearing currents

Additional bearing currents due to steep voltage edges when switching. Without output filters, significant voltage variations can occur on the winding terminals. Make sure the drive system is installed in accordance with EMC requirements.

Mechanical stress and grease lifetime

High speeds that exceed the rated speed and the resulting increased vibrations alter the mechanical running smoothness and the bearings are subjected to increased stress. This reduces the service life of the grease and bearings.

Optional add-on units

Connect the temperature sensor of the monitoring system and the anti-condensation heating according to the appropriate circuit diagram. Only switch on the anti-condensation heating after the motor has been switched off.

Commissioning 5

5.1 Checking the insulation resistance

Work on power installations must only be carried out by specialists.

⚠ WARNING
Lock-out the drive unit to prevent it from being started up unintentionally Attach a warning notice to the start switch.

⚠ WARNING
All covers which are designed to prevent active / live or rotating parts from being touched, or which are necessary to ensure correct cooling, must be installed prior to commissioning

⚠ WARNING
During the measurement, and immediately afterwards, in some cases the terminals are at hazardous voltage levels and they must not be touched Carry out a check on the power cables connected to ensure that no voltage can be applied.

NOTICE
The insulation resistance needs to be checked prior to commissioning and again after any extended periods of storage or periods during which the equipment is not in operation Before measuring the insulation resistance, read the manual for the insulation resistance meter you are going to use. Disconnect any main circuit cables already connected from the terminals before measuring the insulation resistance.

NOTICE
If the critical insulation resistance is less than or equal to this value, the windings must be dried or, if the rotor is removed, cleaned thoroughly and dried Note that the insulation resistance of dried, clean windings is lower than that of warm windings. The insulation resistance can only be properly assessed after conversion to the reference temperature of +25 °C. If the measured value is close to the critical value, you must subsequently check the insulation resistance at appropriately frequent intervals.

Wherever possible, measure the minimum insulation resistance of the winding to the motor housing at a winding temperature of +20 °C to +30 °C. Other values for the insulation resistance apply for temperatures outside this range. When making the measurement, wait until the final resistance value is reached, approx. 1 minute.

Measure the critical insulation resistance at the operating temperature of the winding.

Limit values

The following limit values are valid for the insulation resistance at a rated voltage of U_N < 2 kV and a winding temperature of +25 °C.

500 V	Measuring circuit voltage
10 MΩ	Minimum insulation resistance with new, cleaned or repaired windings
0.5 MΩ/kV	Critical specific insulation resistance after a long operating time

Observe the following:

- When measuring at winding temperatures other than +25 °C, the measured value must be converted to the reference temperature of +25 °C. The insulation resistance is halved for every 10 K increase in temperature, and it is doubled for every 10 K decrease in temperature.
- If the insulation resistance is close to or below the minimum value, the cause could be humidity and dirt accumulation. The windings must then be dried.
- During operation, the insulation resistance of the windings can fall to the critical insulation resistance due to ambient and operational influences. The critical insulation resistance for a +25 °C winding temperature can be calculated, depending on the rated voltage, by multiplying the rated voltage (kV) by the specific critical resistance value (0.5 MΩ/kV); e.g. critical resistance for rated voltage (U_N) 690 V: 690 V x 0.5 MΩ/kV = 0.345 MΩ.

5.2 Commissioning the motor

NOTICE
Protect the motor from overload Do not exceed or undershoot limit speeds, e.g. during operation with a backstop.

NOTICE
With a backstop Running in the wrong direction of rotation can damage the geared motor. Check the direction of rotation before starting up. Turn the input side or motor over manually. Use the phase sequence to check the direction of motor rotation and swap the two external conductors if necessary.

NOTICE
For brakes with lockable manual release No braking effect for lockable manual brake release lever. The brake is then permanently released. Before commissioning the geared motor, ensure that the brake can be applied. We recommend you unscrew and remove the manual brake release lever.

Note

With a brake motor

Before commissioning, check the uniformity of the rated air gap of the brake – in a current-free state – in 3 places around the circumference, using a feeler gauge between the armature disk and the solenoid.

Note

It may be necessary to perform additional checks and tests in accordance with the specific, on-site situation.

After checking and ensuring the following items, you can start commissioning the motor:

- Compare the details on the rating plate with the operating conditions.
- Compare the voltage and frequency of the motor with the supply network values.
- Check the direction of rotation.
- For Y / Δ start-up, ensure that the switchover from star to delta only takes place once the Y-level starting current has decayed.
- Check the electrical connections are fixed securely.
- Check all the touch protection measures for both moving and live parts.
- Check that the monitoring instruments are connected and set correctly.
- Check the coolant temperature.
- Check any supplementary equipment present.
- Check the air inlet points and cooling surfaces are clean.
- Create appropriate grounding and equipotential bonding connections.
- Secure the motor properly.
- Check that the ventilation is not impeded and that the discharged air - also from adjacent assemblies - cannot be drawn back in.
- Check the belt tension if there is a belt drive.
- Seal the terminal box cover and seal the cable entries.

Operation

6

⚠ CAUTION
In the event of changes during operation, the drive unit must be switched off immediately Use the fault table in the section titled "Faults, causes, and remedies" to determine the cause of the fault. Remedy faults or have faults remedied.

Check the motor during operation for:

- Excessive operating temperature
- Changes in the motor noise level.

Faults, causes and remedies

7

Note

Faults and malfunctions occurring during the warranty period and requiring repair work on the geared motor must be remedied only by Technical Support. In the case of faults and malfunctions occurring after the warranty period, the cause of which cannot be precisely identified, we advise our customers to contact our Technical Support.

If you need the help of our Technical Support, please provide the following information:

- Data on the rating plate
- Nature and extent of the fault
- Suspected cause.

Table 7- 1 Faults, causes and remedies

Faults	Causes	Remedy
Bearing overheated	Too much grease in bearing	Remove the excess grease
	Bearing contaminated	Replace bearing
	Belt tension too high	Reduce belt tension
	Coupling forces pull or push	Align the motor precisely, correct the coupling
	Coolant temperature above +40 °C	Adjust the cooling air to the right temperature
	The bearing grease has a dark color	Check for bearing currents
	Not enough grease in bearing	Lubricate as prescribed by the manufacturer
	Incorrect motor installation	Check the motor type of construction
Bearing noise	Not enough grease in bearing	Lubricate as prescribed by the manufacturer
	Incorrect motor installation	Check the motor type of construction
	Brinelling on the inner ring of the bearing, e.g. due to motor startup with locked bearing	Replace bearing, prevent vibration when motor is stationary

Faults	Causes	Remedy
Motor running unevenly	Coupling forces pull or push	Align the motor precisely, correct the coupling
	Incorrect motor installation	Check the motor type of construction
	Out of balance due to belt pulley or coupling	Balance precisely
	Machine mounting too weak	Check the mounting
Motor does not ramp up	Counter torque too high	Check the motor torque and the load torque
	Low line voltage	Check line conditions
	Phase interruption	Check the connection network
	Circuitry incorrect	Observe the circuit diagram and rating plate
Motor overheated	Circuitry incorrect	Observe the circuit diagram and rating plate
	Overload	Compare data on the rating plate
	Switching frequency too high	Observe the rated duty
	Insufficient ventilation	Check the cooling air ducts, check the direction of rotation
	Cooling air ducts contaminated	Clean cooling air ducts
Significant drop in speed	Counter torque too high	Check the motor torque and the load torque
	Low line voltage	Check line conditions
	Phase interruption	Check the connection network
	Circuitry incorrect	Observe the circuit diagram and rating plate
	Overload	Compare data on the rating plate
Protective equipment trips	Phase interruption	Check the connection network
	Circuitry incorrect	Observe the circuit diagram and rating plate
	Overload	Compare data on the rating plate
	Switching frequency too high	Observe the rated duty
	Winding and terminal short-circuit	Measure the insulation resistance
	Startup time is exceeded	Check the power-up conditions

Service and maintenance 8

8.1 General notes about maintenance

⚠ WARNING
Danger of severe injuries caused by the unintentional starting of the drive unit
Secure the drive unit to prevent it from being started up unintentionally.
Attach a warning notice to the start switch.

NOTICE
Material damage caused by improper maintenance
Service and maintenance must only be carried out by properly trained and authorized personnel. Only original parts supplied by Siemens AG can be used for servicing and maintenance.

All inspection, maintenance, and repair work must be carried out with care by trained personnel only. Observe the information in Section General information and safety notes (Page 5).

8.2 Description of maintenance and repair work

8.2.1 Locking the manual release of the brake (optional)

⚠ CAUTION
No braking effect for lockable manual brake release lever The brake is then permanently released. Before commissioning the geared motor, ensure that the brake can be applied. We recommend you unscrew and remove the manual brake release lever during operation.

The lockable manual release of the brake must be kept in the released state for maintenance work.

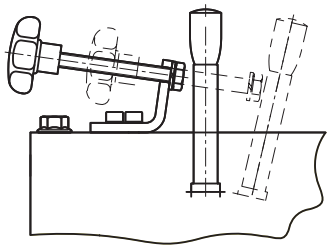

Figure 8-1 Lockable manual release

Locking the manual brake release lever

1. Screw on the manual brake release lever.
2. Bring the manual brake release lever into the position in which the brake is released.
3. Tighten the locking screw far enough so that the manual brake release lever cannot return to the unreleased position.

You can now start maintenance work on the plant with a released brake.

Releasing the lock

1. Unscrew the locking screw far enough so that the brake can completely return to the unreleased position. The gap between the locking screw and the manual brake release lever must be 2 to 5 mm.
2. Unscrew the manual brake release lever.

You have ensured that the manual brake release is no longer locked.

8.2.2 Lubrication

The bearings of the standard version surface-cooled motors up to size 200 are permanently lubricated. If this is not the case, this is indicated by a warning notice on the motor.

The specified grease service life values are valid for an ambient temperature of max. +40 °C. For every 10 °C increase in temperature, the grease service life is reduced by a factor of 0.7 of the value in the table (max. +20 °C = factor 0.5).

At an ambient temperature of +25 °C, the grease service life can be expected to be doubled.

Irrespective of the number of operating hours, renew the roller bearing grease or the bearing (2Z bearing) after 3 or 4 years at the latest.

Horizontal type of construction (IM B.)

Table 8- 1 Grease service life in operating hours [h] for permanent lubrication, grease fill quantity [g] per bearing

Size	Motor speed n_N [rpm]						Grease fill quantity	
	3 600	3 000	1 800	1 500	1 200	≤ 1 000	D end	ND end
	Operating hours [h]						[g]	
71	33 000	33 000	33 000	33 000	33 000	33 000	7	5
80							9	9
90							15	11
100	24 000						20	15
112							45	25
132		24 000					75	50
160	17 000						90	70
180							110	80
200								90
225		20 000	20 000	40 000	40 000	40 000		
250								
280								
315								

Vertical type of construction (IM V.)

Table 8- 2 Grease service life values in operating hours [h] for permanent lubrication, grease fill quantity [g] per bearing

Size	Motor speed n_N [rpm]						Grease fill quantity	
	3 600	3 000	1 800	1 500	1 200	≤ 1 000	D end	ND end
	Operating hours [h]						[g]	
71	24 000	33 000	33 000	33 000	33 000	33 000	9	9
80		24 000						
90							15	11
100	17 000						20	15
112		17 000	24 000				45	25
132	12 000			24 000			75	50
160							90	70
180		12 000			24 000		110	60
200								80

8.2.3 Cleaning the motor

NOTICE
Dust deposits prevent heat radiation and cause high housing temperatures Keep the geared motor free from dirt and dust.

NOTICE
Cleaning with high-pressure cleaning equipment can cause water to enter the gearbox. Seals can be damaged Do not use a high-pressure cleaning appliance to clean the geared motor. Do not use tools with sharp edges.

Switch off the power supply to the drive unit before cleaning it.

8.2.4 Checking tightness of fastening bolts

Note

Replace damaged headless screws with new screws of the same type and strength class.

Switch off the power to the drive unit and use a torque wrench to check the seating of all fastening bolts.

The general tolerance for the tightening torque in Nm is 10 %. The friction coefficient is 0.14 µ.

Table 8- 3 Tightening torques for fastening bolts

Thread size	Tightening torque at strength class		
	8.8	10.9	12.9
	[Nm]	[Nm]	[Nm]
M4	3	4	5
M5	6	9	10
M6	10	15	18
M8	25	35	41
M10	50	70	85
M12	90	120	145
M16	210	295	355
M20	450	580	690
M24	750	1 000	1 200
M30	1 500	2 000	2 400
M36	2 500	3 600	4 200

8.2.5 Inspection of the motor

Carry out a scheduled inspection of the geared motor once a year in accordance with the possible criteria listed in Section Faults, causes and remedies (Page 47).

Check the geared motor in accordance with the criteria set out in Section General information and safety notes (Page 5).

Touch up damaged paintwork carefully.

8.2.6 Servicing the brake

8.2.6.1 Wear of the spring-operated brake

The friction lining and the mechanical components of the brake are subject to wear due to their function. For safe and fault-free operation, the brake must be checked regularly, adjusted and, if necessary, replaced.

The following table describes the different causes of wear and their effects on the spring-operated brake components. To be able to calculate the service life of the rotor and the brake and to determine the stipulated maintenance intervals, the important influencing factors must be quantified. Here the most important factors are the work of friction transformed, the starting speed of the braking and the frequency of switching. Should several of the causes of wear to the friction lining listed occur at the same time in a single application, the influencing factors should be added together for the wear calculation.

Table 8- 4 Causes of wear to the spring-operated brake

Component	Cause	Effect	Influencing factor
Friction lining	Operational braking	Friction lining wear	Work of friction transformed
	Emergency stops		
	Overlap wear when starting up and stopping the geared motor		
	Active braking by the motor supported by the brake (quick stop)		
	Low speed and type of construction 'motor at top'		
	Start-up wear for motor mounting position with vertical shaft even when the brake is released		Number of start / stop cycles
Armature disk and flange	Friction of the brake lining	Run-in of armature disk and flange	Work of friction transformed

Component	Cause	Effect	Influencing factor
Braking rotor gear teeth	Relative movement and impacts between rotor and hub	Wear of the teeth (primarily on the rotor side)	Number of start / stop cycles
Support of the armature disk	Load change and impacts in the backlash between the armature disk, sleeve screws and guide pins	Deflection of armature disk, sleeve screws and pins	Number of start / stop cycles, strength of braking torque
Springs	Axial load cycle and shear stresses in the springs due to radial backlash in the armature disk	Decrease in the spring force or fatigue failure	Number of switching operations of the brake

8.2.6.2 Maintenance intervals for the brake

For safe and fault-free operation, the spring-operated brake must be regularly checked and maintained.

For operational braking, the necessary maintenance intervals are primarily a result of the loading on the brake in the application. When calculating the maintenance interval, all the causes of wear must be taken into account. For low loaded brakes, e.g. holding brakes with emergency stop, a regular inspection at fixed time intervals is recommended.

A lack of brake maintenance can lead to operating faults, production outage or damage to the plant. For this reason, a maintenance plan must be stipulated for each application, appropriate to the operating conditions and loading of the brake. The following table lists the stipulated maintenance intervals and maintenance work to be carried out for the pneumatic brake.

Table 8- 5 Maintenance interval for the brake

Brake	Maintenance interval
Operational brake	According to service life calculation
	Otherwise every six months
	After 4 000 operating hours at the latest
Holding brake with emergency stop	Minimum every 2 years
	After 10 million cycles at the latest
	Shorter intervals for frequent emergency stops

8.2.6.3 Adjusting the air gap

⚠ WARNING
Switch off the power supply to the drive unit
The brake must be in a torque-free condition.
Secure the drive unit to prevent it from being started up unintentionally.
Attach a warning notice to the start switch.

⚠ WARNING
Decrease of braking effect due to contamination
Do not allow oil or grease to come into contact with friction surfaces.

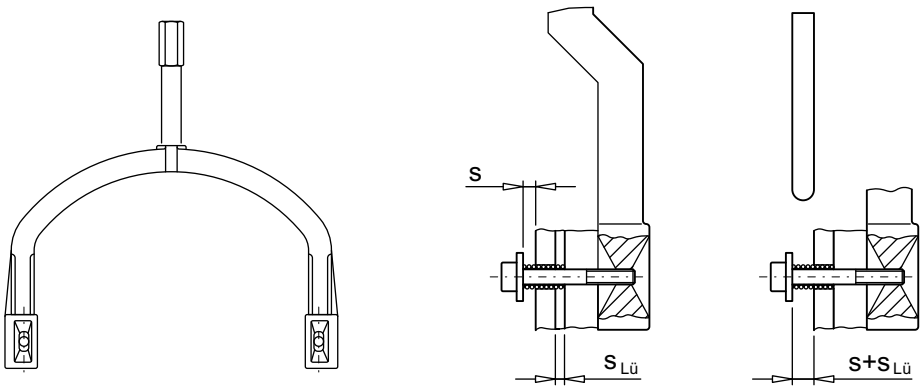

Figure 8-2 Setting dimension s

Procedure

1. Remove the fan cover.
2. Loosen the fastening screws of the brake.
3. Screw the sleeve screws further into the magnet part using an open-ended spanner.
4. Tighten the fastening screws of the brake.
5. Check the air gap $s_{Lü}$, in the vicinity of the screws using a feeler gauge.
6. Rectify the air gap $s_{Lü}$ if necessary and check it again.
7. When combined with manual brake release:
   Check the setting dimension "s" and correct "s" if necessary.
8. Mount the fan cover.

You have now set the air gap.

Table 8- 6 Air gap values

Brake type	Rated air gap $s_{LüNenn}$ (+0.1 / -0.05)	Max. air gap at		Setting dimension "s"
		Standard excitation $s_{Lümax.}$	Overexcitation $s_{Lümax.}$	
	[mm]	[mm]	[mm]	[mm]
L4/1.4	0.2	0.65	0.65	1.0
L4/2		0.6	0.6	
L4/3		0.55	0.55	
L4		0.5	0.5	
L4/5		0.4	0.4	
L8/3, L8/4		0.6	0.6	
L8/5, L8/6.3		0.55	0.55	
L8		0.5	0.5	
L8/10		0.45	0.45	
L16/8, L16/10, L16/13, L16		0.6	0.6	
L16/20		0.5	0.5	
L32/14, L32/18, L60/25	0.3	0.9	0.9	1.5
L32/23, L60/38		0.85	0.85	
L32, L60/50		0.75	0.75	
L32/40, L60		0.65	0.65	
L80/25, L80/35, L80/50, L80/63, L80		0.9	0.9	
L80/100		0.7	0.7	
L150/60, L150/80, L150/100, L150/125, L150, L260/100, L260/145, L260/180, L260/200, L260/240, L260	0.4	1.2	1.2	2.0
L260/315		1.05	1.05	
L400/265, L400/300, L400/360, L400	0.5	1.5	1.5	2.5
L400/600		0.9	0.9	

Table 8- 7 Tightening torque for tightening bolt

Brake type		Thread size	Tightening torque
Siemens	INTORQ BA BFK458		[Nm]
L4	(06E)	3 x M4	2.8
L8	(08E)	3 x M5	5.5
L16	(10E)	3 x M6	9.5
L32	(12E)	3 x M6	9.5
L60, L80	(14E), (16E)	3 x M8	23
L150	(18E)	6 x M8	23
L260, L400	(20E), (25E)	6 x M10	46

8.2.6.4 Replacing the friction lining

⚠ WARNING

Switch off the power supply to the drive unit

The brake must be in a torque-free condition.

Secure the drive unit to prevent it from being started up unintentionally.

Attach a warning notice to the start switch.

Procedure

1. Remove the fan cover.

   When combined with manual release:
   Unscrew the manual brake release lever.

   With forced ventilation:
   Remove the fan cover with forced ventilation.
2. Remove the connection cable.
3. Remove the fan locking ring and pull out the fan.
4. Loosen the brake screws evenly and remove them completely.
5. Pull the rotor completely off the hub.
6. Check the teeth on the hub.
7. Check the friction surface on the bearing shield. If there is severe striation on the friction plate or flange, replace the friction plate or flange. Rework the friction surfaces if there is severe striation on the bearing shield.

8. Measure the thickness of the new rotor and the head height of the sleeve screws with a caliper gauge.
9. Calculate the gap between the magnet part and the armature disk as follows:
   Gap = Rotor thickness + $s_{LüNenn}$ - head height.
10. Unscrew the sleeve screws evenly until the calculated gap between the magnet part and the armature disk is set.
11. Mount the new rotor and the magnet part and adjust it.
12. Connect the connection cable.
13. Mount the fan cover.

You have now replaced the friction lining of the brake.

Table 8- 8 Brake data

Brake type	Rated air gap $s_{LüNenn}$ (+0.1 / -0.05)	Min. rotor thickness	Max. permissible	
			Operating speed if max. permissible operating energy utilized	No-load speed with emergency stop function
	[mm]	[mm]	[rpm]	[rpm]
L4	0.2	4.5	3 600	6 000
L8	0.2	5.5	3 600	6 000
L16	0.2	7.5	3 600	6 000
L32	0.3	8	3 600	6 000
L60	0.3	7.5	3 600	6 000
L80	0.3	8	3 600	5 300
L150	0.4	10	3 600	4 400
L260	0.4	12	3 600	3 700
L400	0,5	15,5	3 000	3 000

Disposal

9

⚠ WARNING
Incorrect disposal of used oil is a threat to the environment and health After use, oil must be taken to a used oil collection point. The addition of foreign material such as solvents and brake and cooling fluid is prohibited. Avoid prolonged contact with the skin.

Empty the used oil from the gearbox. The used oil must be collected, stored, transported and disposed of in accordance with regulations. Do not mix polyglycols with mineral oil. Polyglycols must be disposed of separately.

Please observe country-specific laws. Under German law, oils with different disposal codes may not be mixed with one another to allow optimal treatment of the oil (§4 VI Used Oil).

Collect and dispose of used oil in accordance with regulations.

Remove oil spillages immediately with an oil-binding agent in compliance with environmental requirements.

Dispose of the housing parts, gears, shafts, and roller bearings of the geared motor as steel scrap. The same applies to grey cast iron parts, if no separate collection is made.

The worm wheels are made partly from non-ferrous metal. Dispose of them accordingly.

Dispose of the packing material according to regulations or recycle it.

Table 9- 1 Disposal codes for gear oils

Type of oil	Name	Disposal code
Mineral oil	CLP ISO VG220	13 02 05
Polyglycols	CLP ISO PG VG220 CLP ISO PG VG460	13 02 08
Polyalphaolefins	CLP ISO PAO VG68 CLP ISO PAO VG220 CLP ISO H1 VG460	13 02 06
Biologically degradable oils	CLP ISO E VG220	13 02 07

Technical data

10

10.1 Type designation

Table 10- 1 Example of the type designation structure

Example:	LA	100L	4/2	F -	L16NH
Motor type	LA				
Size		100L			
Number of poles			4/2		
Special features				F	
Mounted unit					L16NH

Table 10- 2 Type designation code

Motor type	
LA / LG	AC induction motor, integrated
LAI / LGI	AC induction motor with IEC flange
Special features	
E	High efficiency
F	Forced ventilation
I	High inertia fans
W	Protective canopy
IN	Incremental encoder
IR	Resolver
IA	Absolute encoder
IV	Encoder mount prepared
D	Handwheel
Mounted unit	
L, KFB	Spring pressure single disk DC brake
16	Size = rated braking torque
../10	Set braking torque
N	Standard version
G	Enclosed version
H, HA	Manual brake release, lockable manual brake release
M	Microswitch

10.2 General technical data

The most important technical data appears on the rating plate of the gearboxes and geared motors.

This data, together with the contractual agreements for the geared motors, determines the limits of intended use.

In the case of geared motors, a rating plate attached to the motor usually indicates the data for the entire drive.

In certain cases separate rating plates are mounted on the gearbox and the motor.

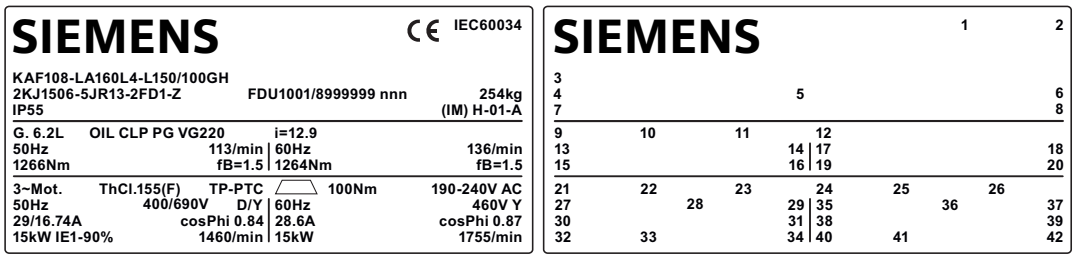

Figure 10-1 Rating plate example

1 CE marking or other marking, if required
2 Applied standard
3 Model - Type - Size
4 Order No.
5 Serial No.
6 Weight m [kg]
7 IEC 60034-5 or IEC 60529 protection
8 Type of construction (IM)
9 Oil quantity [l] main gearbox / intermediate gearbox + extruder flange
10 Type of oil
11 Oil viscosity ISO VG class to DIN 51519 / ISO 3448
12 Total transmission ratio i

Frequency 1

13 Rated frequency f [Hz]
14 Speed at output n_2 [rpm]
15 Torque at output T_2 [Nm]
16 Service factor f_B

Frequency 2

17 Rated frequency f [Hz]

18 Speed at output n_2 [rpm]

19 Torque at output T_2 [Nm]

20 Service factor f_B

Motor data

21 Phase number and type of current for the motor

22 Temperature class Th.Cl.

23 Motor protection (TP)

24 Symbols (IEC 60617-2): ⏢ = brake

25 Braking torque T_{Br} [Nm]

26 Brake supply voltage U [V]

Frequency 1

27 Rated frequency f [Hz]

28 Rated voltage / range U [V]

29 Circuit, graphical symbols as per DIN EN 60617 Part 6 / IEC 60617-6

30 Rated current I [A]

31 Power factor cos φ

32 Rated output P [kW], mode (if ≠ S1)

33 Efficiency class designation

34 Rated speed n_1 [rpm]

Frequency 2

35 Rated frequency f [Hz]

36 Rated voltage / range U [V]

37 Rated current I [A]

38 Power factor cos φ

39 Circuit, graphical symbols as per DIN EN 60617 Part 6 / IEC 60617-6

40 Rated output P [kW], mode (if ≠ S1)

41 Efficiency class designation

42 Rated speed n_1 [rpm]

10.3 Weight

The weight of the entire geared motor is given in the shipping papers.

If the weight exceeds 30 kg, the weight of the entire geared motor is indicated on the rating plate of the gearbox or geared motor.

Where there are several rating plates on one geared motor, the specification on the main gearbox is decisive.

The weight specification refers only to the condition of the product on delivery.

Spare parts

11

11.1 Stocking of spare parts

By stocking the most important spare and wearing parts on site, you can ensure that the gearbox or geared motor is ready for use at any time.

NOTICE
The installation and / or use of inferior products can have a negative impact on the design characteristics of the geared motor and might consequently impair the active and / or passive safety features of the machine Please note that spare parts and accessories not supplied by us have not been tested or approved by us. Siemens AG will accept no liability or warranty whatsoever for damage occurring as a result of the use of non-original spare parts or accessories.

We can only accept liability for original spare parts supplied by Siemens Geared Motors GmbH.

Please note that single components often have special production and supply specifications. We always supply spare parts which meet state-of-the-art technical standards and comply with the latest legal requirements.

Please state the following data when ordering spare parts:

- Serial no. see rating plate ⑤
- Type designation see rating plate ③
- Part no. (3-digit item no. from spare parts list, 6-digit code no. or 7-digit article no.)
- Quantity

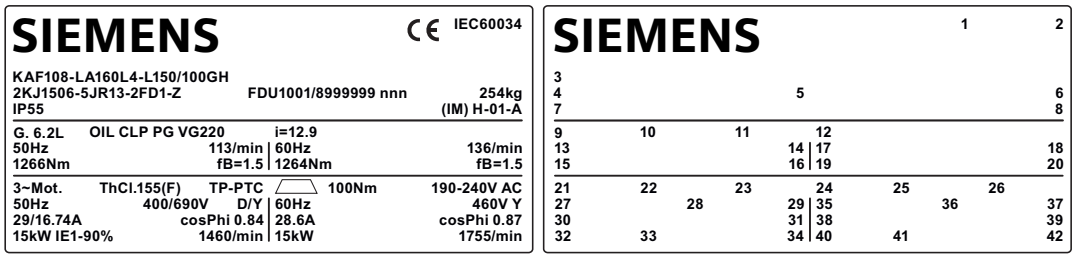

Figure 11-1 Example of a MOTOX rating plate

For motors of series 1LA / 1LG with their own rating plate, the spare parts documentation in the original operating instructions applies.

11.2 Spare parts lists

11.2.1 MODULOG motor sizes 71 - 200

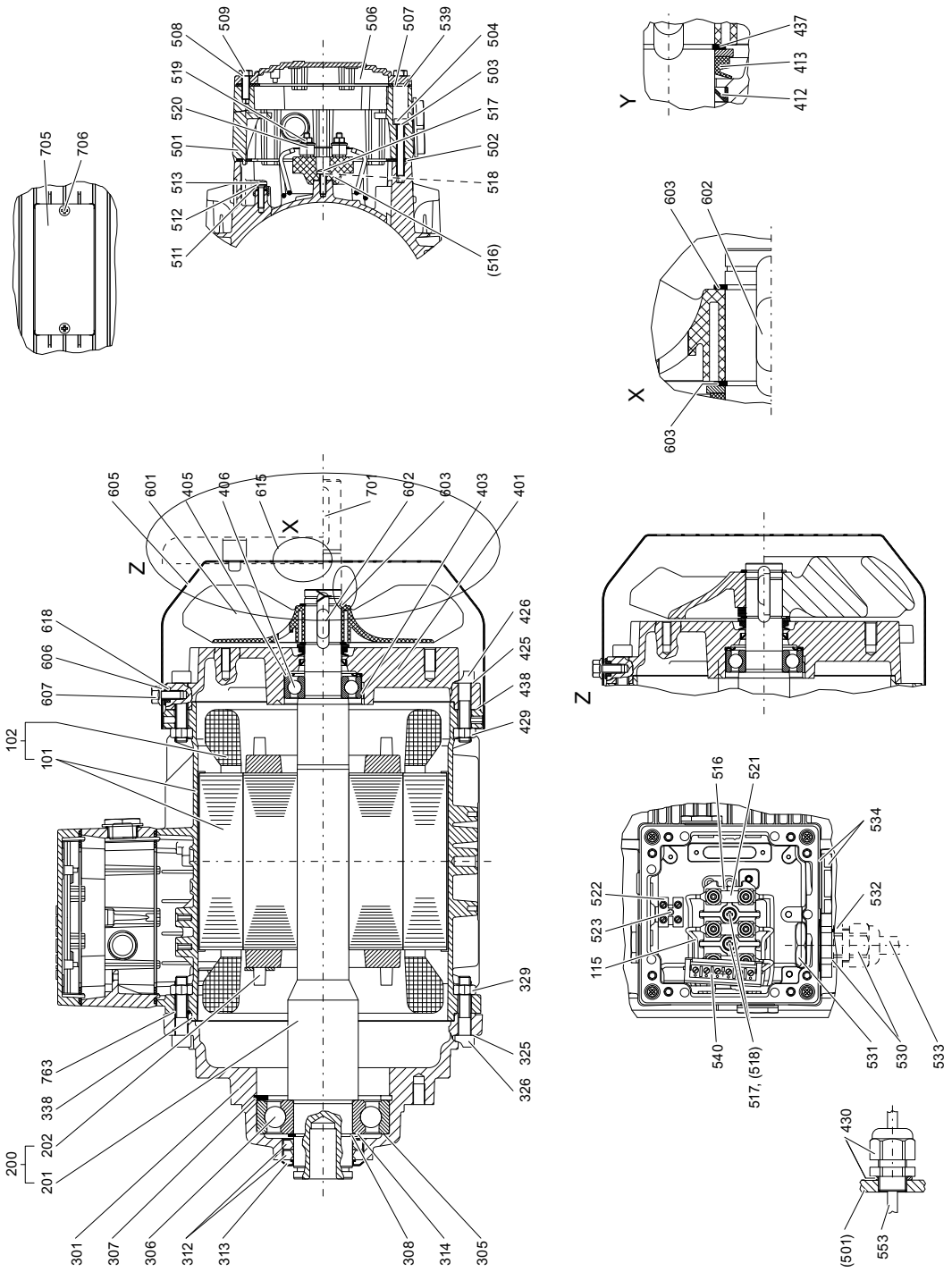

101	Stator frame with core, unwound
102	Stator frame with core, wound
115	End sleeve / lug
200	Rotor
201	Shaft
202	Rotor core
301	Bearing shield
305	Supporting disk / shim
306	Bearing
307	Locking ring
308	Locking ring
312	Shaft sealing ring
313	Oil splasher
314	Supporting disk / shim
325	Screw lock
326	Bolt
329	Nut
338	Seal
401	Bearing shield
403	Bolt
405	Supporting disk / shim
406	Bearing
412	Shaft sealing ring
413	Shaft sealing ring
425	Screw lock
426	Bolt
429	Nut
430	Complete cable gland
437	Grub screw
438	Seal
501	Terminal box
502	Seal
503	Screw lock
504	Bolt
506	Terminal box
507	Seal
508	Screw lock
509	Bolt
511	Bolt
512	Screw lock
513	Supporting disk / shim
516	Connecting terminal plate
517	Bolt
518	Screw lock
519	Nut

520	Supporting disk / shim
521	Terminal connector
522	Terminal block
523	Bolt
530	Cable gland
531	Nut
532	Seal
533	Cable / line
534	Screw plug
539	Screw lock
540	Rectifier
553	Cable / line
601	Fan
602	Supporting disk / shim
603	Locking ring
605	Fan cover
606	Screw lock
607	Bolt
615	Protective canopy
618	Damping disk
701	Featherkey
705	Rating plate
706	Bolt
763	O-ring

Figure 11-2 MODULOG motor sizes 71 - 200

11.2.2 MODULOG brake motor sizes LA71 - LA160

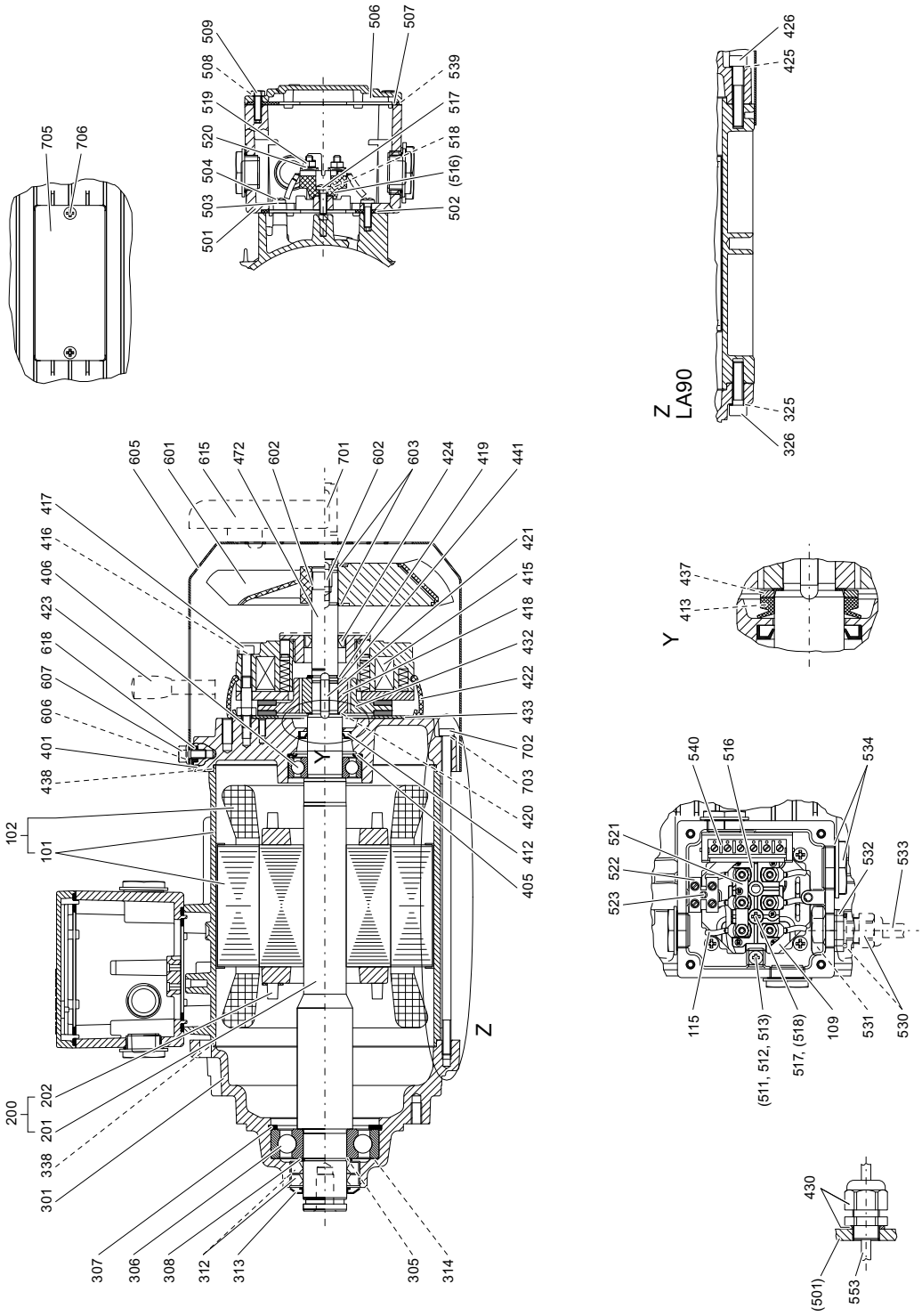

Figure 11-3 MODULOG brake motor sizes LA71 - LA90

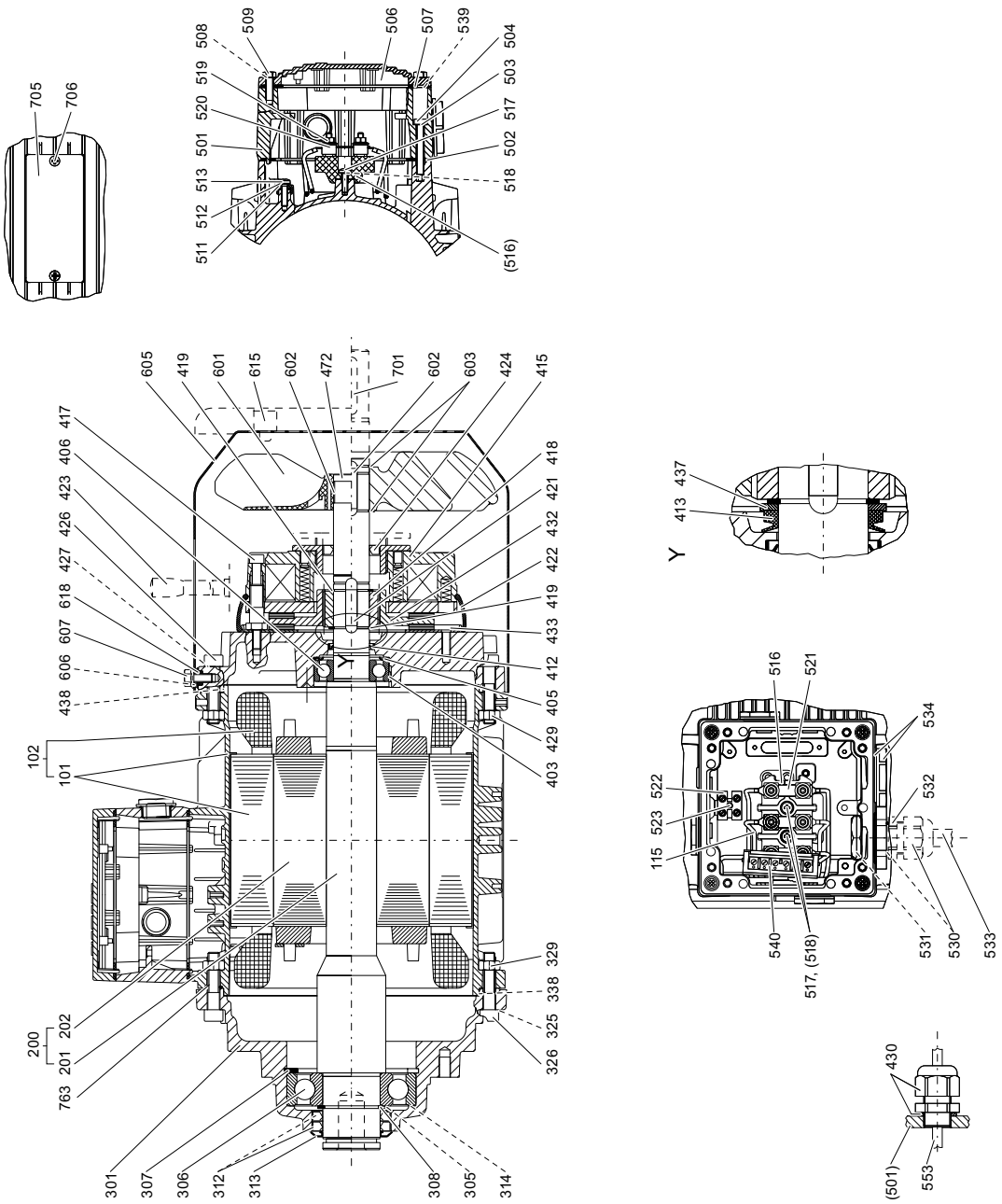

Figure 11-4 MODULOG brake motor sizes LA100 - LA160

Table 11- 1 Spare parts list for MODULOG brake motor sizes LA71 - LA160

101 Stator frame with core, unwound

102 Stator frame with core, wound

109 Plugs for cable slot

115 End sleeve / lug

200 Rotor

201 Shaft

202	Rotor core
301	Bearing shield
305	Supporting disk / shim
306	Bearing
307	Locking ring
308	Locking ring
312	Shaft sealing ring
313	Oil splasher
314	Supporting disk / shim
325	Screw lock
326	Bolt
329	Nut
338	Seal
401	Bearing shield
403	Bolt
405	Supporting disk / shim
406	Bearing
412	Shaft sealing ring
413	Shaft sealing ring
415	Brake
416	Screw lock
417	Bolt
418	Coupling driver
419	Locking ring
420	Supporting disk / shim
421	Featherkey
422	Supporting disk / shim
423	Manual release
424	Shaft sealing ring
425	Screw lock
426	Bolt
427	Fuse
429	Nut
430	Complete cable gland
432	Friction disk
433	Friction plate
437	Grub screw
438	Seal
441	Supporting disk / shim
472	Shaft end
501	Terminal box base

502	Seal
503	Screw lock
504	Bolt
506	Terminal box cover
507	Seal
508	Screw lock
509	Bolt
511	Bolt
512	Screw lock
513	Supporting disk / shim
516	Complete terminal board
517	Bolt
518	Screw lock
519	Nut
520	Supporting disk / shim
521	Terminal connector
522	Terminal block
523	Bolt
530	Cable gland
531	Nut
532	Seal
533	Cable / line
534	Screw plug
539	Screw lock
540	Rectifier
553	Cable / line
601	Fan
602	Tolerance ring
603	Locking ring
605	Fan cover
606	Screw lock
607	Bolt
615	Protective canopy
618	Damping disk
701	Featherkey
702	Bolt
703	Screw lock
705	Rating plate
706	Bolt
763	O-ring

11.2.3 MODULOG brake motor sizes LA71 - LA160 with backstop

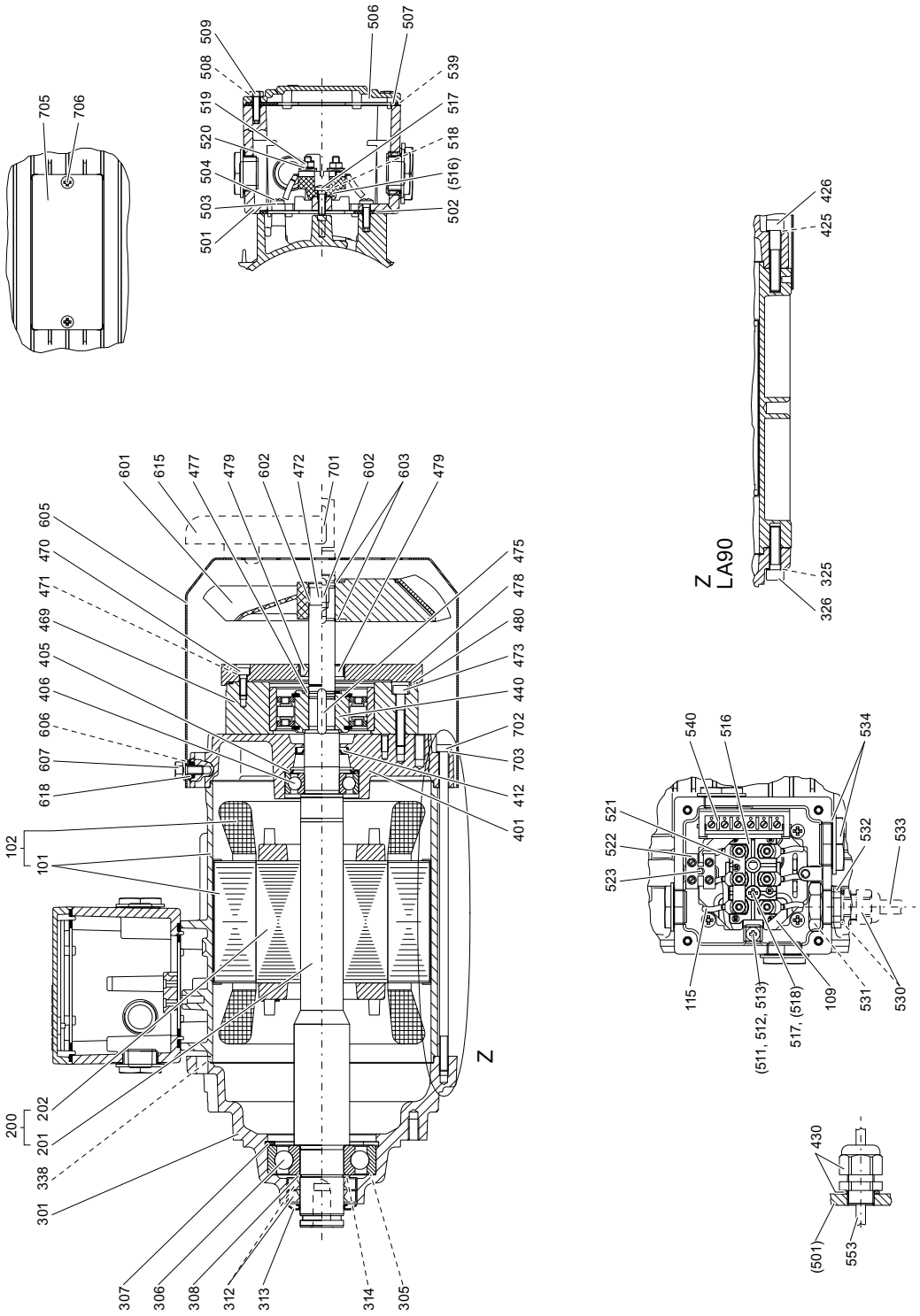

Figure 11-5 MODULOG brake motor sizes LA71 - LA90 with backstop

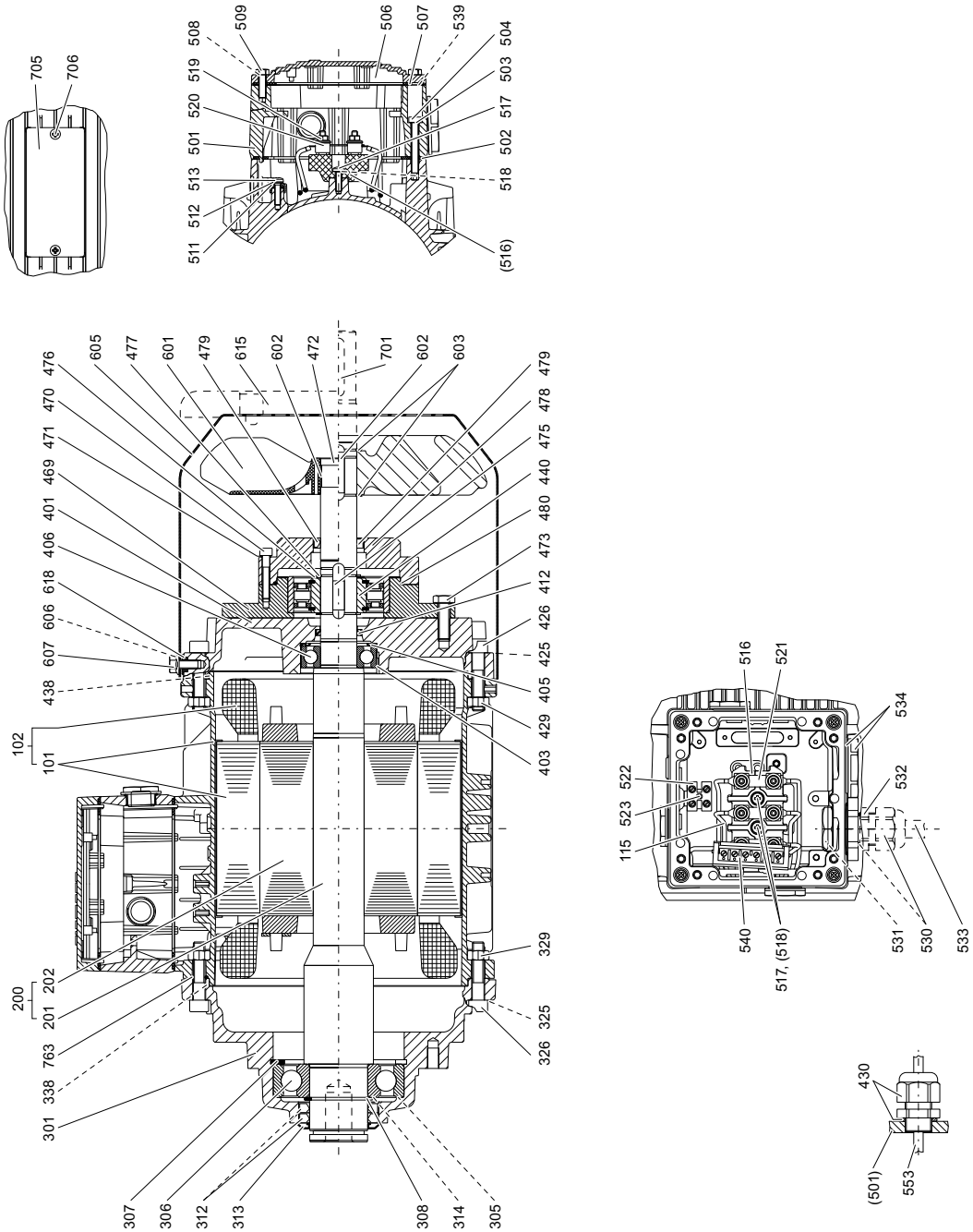

Figure 11-6 MODULOG brake motor sizes LA100 - LA160 with backstop

Table 11- 2 Spare parts list for MODULOG brake motor sizes LA71 - LA160 with backstop

101 Stator frame with core, unwound

102 Stator frame with core, wound

109 Plugs for cable slot

115 End sleeve / lug

200 Rotor

201 Shaft
202 Rotor core
301 Bearing shield
305 Supporting disk / shim
306 Bearing
307 Locking ring
308 Locking ring
312 Shaft sealing ring
313 Oil splasher
314 Supporting disk / shim
325 Screw lock
326 Bolt
329 Nut
338 Seal
401 Bearing shield
403 Bolt
405 Spring washer
406 Bearing
412 Shaft sealing ring
425 Screw lock
426 Bolt
429 Nut
430 Complete cable gland
438 Seal
440 Backstop
469 Adapter
470 Bolt
471 Screw lock
472 Shaft end
473 Bolt
475 Featherkey
476 Supporting disk / shim
477 Locking ring
478 Protection cover
479 Sealing ring
480 Incremental encoder
501 Terminal box
502 Seal
503 Screw lock
504 Bolt
506 Terminal box

507	Seal
508	Screw lock
509	Bolt
511	Bolt
512	Screw lock
513	Supporting disk / shim
516	Connecting terminal plate
517	Bolt
518	Screw lock
519	Bolt
520	Washer
521	Terminal connector
522	Terminal block
523	Bolt
530	Cable gland
531	Nut
532	Seal
533	Cable / line
534	Screw plug
539	Screw lock
540	Rectifier
553	Cable / line
601	Fan
602	Tolerance ring
603	Locking ring
605	Fan cover
606	Screw lock
607	Bolt
615	Protective canopy
618	Damping disk
701	Featherkey
702	Bolt
703	Screw lock
705	Rating plate
706	Bolt
763	O-ring

11.2.4 Encoder

11.2.4.1 Encoder on fan cover

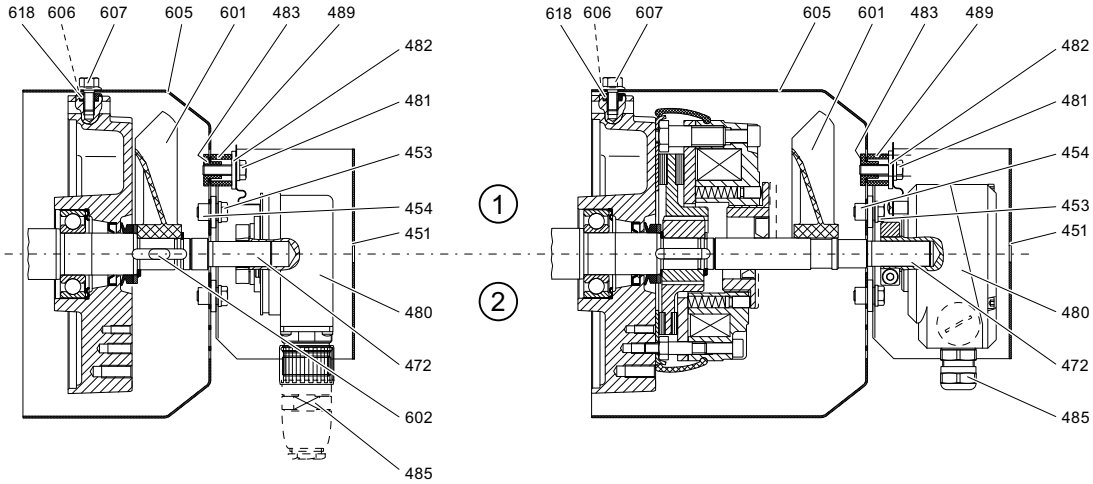

① Self-ventilated motor
② Unventilated motor
451 Cover
453 Bolt
454 Nut
472 Shaft end
480 Encoder
481 Bolt
482 Screw lock
483 Nut
485 Coupling
489 Spacer / bush
601 Fan
602 Featherkey
605 Fan cover
606 Screw lock
607 Bolt
618 Damping disk

Figure 11-7 Encoder on fan cover

11.2.4.2 Encoder in motor with forced ventilation

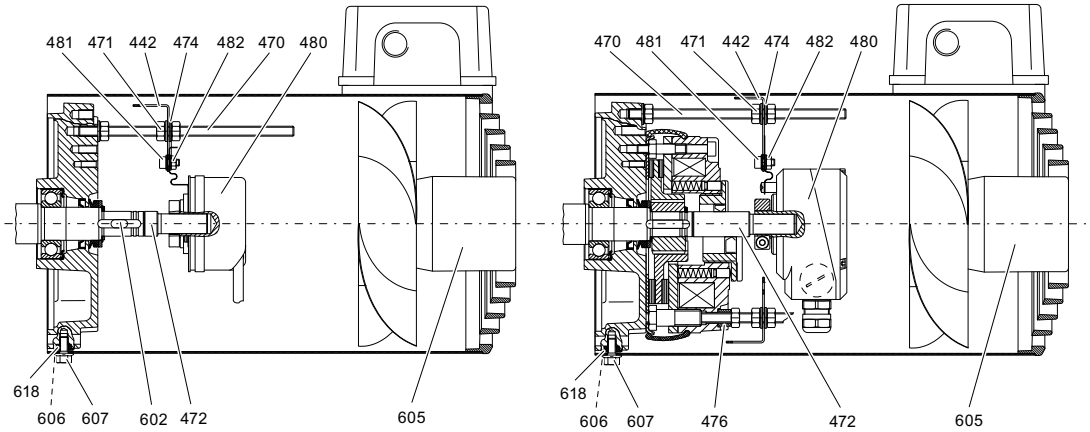

442 Torque arm
470 Bolt
471 Screw lock
472 Shaft end
474 Screw lock
476 Supporting disk / shim
480 Encoder
481 Bolt
482 Screw lock
602 Featherkey
605 Fan cover
606 Screw lock
607 Bolt
618 Damping disk

Figure 11-8 Encoder in motor with forced ventilation

EC Declaration of Conformity

12

EC Declaration of Conformity according to Directive 2006/95/EC.

Document No. KE DMLA 1A 12.12

The manufacturer Siemens AG, 72072 Tübingen, Germany, declares for the standard version of the motors LA / LG and LAI / LGI sizes 71 to 315:

The designated products conform to the requirements of the European Directive 2006/95/EC. It has been developed and manufactured in compliance with the following European standards:

- EN 60034 with all relevant sections in the latest edition in each case
- EN 60204-1

EC Declarations of Conformity and / or manufacturer's declarations for all subassemblies, integrated and add-on units are available. These may be specifically:

- Electromagnetic brake L, KFB with connected accessories such as rectifier and switching device SEG, SER
- External fan unit F
- Shaft encoder IA, IM, IN, RE

The designated products may only be commissioned once it has been established that the machine into which they are to be incorporated meets the provisions of Directive 2006/42/EC.

First use of the CE marking: 20.12.1995

First edition: 15.12.1995

Tübingen, December 3, 2012

i.V.

i.V.

Thomas Raster
Head of Research & Development Electrical

Lothar Hirschberger
Head of Quality Management

Further information

MOTOX on the Internet
www.siemens.com/gearedmotors

Siemens AG
Industry Sector
Mechanical Drives
Postfach 1709
72007 TÜBINGEN
GERMANY

Subject to change without prior notice

© Siemens AG 2012

www.siemens.com/drivetechnology